ED.H F Kc

DIRECT EXPANSION CLOSE CONTROL UNITS WITH WATER COOLED CONDENSERS AND ADDITIONAL CHILLED WATER - FREE COOLING COIL

COOLING CAPACITY FROM 21,9 TO 103 kW

ED.H 331 F U Kc

The range of direct expansion close control with water cooled condenser and free cooling coil, **ED.H F series,** provided with a water-refrigerant interlaced row coil and allowing, besides direct expansion, the production of cool air by using external temperature (for example matching to a dry cooler), it is particularly suitable for use in data centres, technological rooms, in telecom centres and all areas where it is necessary to maintain constant hygrometric conditions all-year long, as to guarantee correct functioning of installed equipments. Thanks to this technology, based on energy saving, it is possible to remarkably save the operating costs, by sensibly reducing amortisation time of the plant.
Depending on the cooling capacity, they are available with one or two cooling circuits.

Thanks to their technologically advanced design, these close control units are able to control the ambient temperature with remarkably high precision and, when the humidity level is required, to adapt their cooling capacity to the room requirements, all automatically managed by the microprocessor on board.

The high technology employed during their design together with the use of the best components available on the markets, make these units extremely reliable and therefore able to work for long periods, without a break.

These units are particularly easy to install also in small spaces and easily accessible on the front side for ordinary and extraordinary service operations. They are completely assembled and tested in the factory and supplied with refrigerant and oil charge.

The units are available in different configurations, related to the air return and discharge:

- **U** front air return, upflow air discharge,
- **V** bottom air return, upflow air discharge,
- **B** back air return, upflow air discharge,
- **D** top air return, downflow air discharge.

Operation limits: ambient temperature from 19 to 35°C - water at condenser inlet min. 20°C – outlet max 50 °C - (for water at inlet < 20°C it is necessary to install option VP).

MAIN COMPONENTS

Structure realized with a framework and internal parts made of galvanized steel riveted profiles and supports, making the structure strong and suitable also for extreme transport and handling conditions.

The external panels, fixed to frame with quick opening connections, are made of pre-painted steel sheet (RAL 9004), ensuring a long-term durability to the unit. They are internally insulated with self-extinguishing sound-proofing material (class HF1 - UL94) reducing the overall sound level of the unit. On request (option IS1), it is available the sound-proofing insulation with class 1 material in conformity to the main European regulations in force. All the front and side panels can be dismantled so to allow an easy access to the main components.
Moreover, the front of the unit is provided with double panels and inspection window (not available for version U), suitably arranged to let the unit work also with open panels during technical interventions, to allow more accurate regulations and more quick timing for ordinary and extraordinary service operations.

High-efficiency **scroll compressor** (EER > 3.2 at ARI conditions), with low sound level, internal heat protection, installed on rubber vibration dampers, supplied with crankcase heater.
In the case of 2 circuit units, in case of problem on one of the circuit, the 50% operation of the unit is anyway granted.

Single-inlet and backward curved centrifugal fans made of high-performance composite material, directly coupled to a three-phase electrical motor with IP54 Class F protection and provided with a thermal protection inside the motor winding. The fans are fixed on suitable supports reducing the transmission of vibration to the frame and the impeller is statically and dynamically balanced with long-life bearings. It is possible to regulate the fan speed by means of an autotransformer and to adjust their air flow to the head pressure requested on site. It is clear that a higher fans speed rotation involves an increase in the sound level of the unit.
All the units are equipped with low airflow and clogged filter alarms which, by means of differential pressure switches, stop the unit operation in case of fans problems and give a signal on microprocessor for replacement respectively.

Interlaced row **evaporating and free cooling coil,** so to maximize cooling capacity both during mixed operation (through a 3-way modulating valve controlled by the microprocessor) and particularly during free cooling or direct operation when completely exploiting the finned surface of the coil. It is realized with copper tube and aluminium fins and suitably sized with a wide exchange surface and a low air crossing speed so to allow a remarkable heat exchange and reduce the pressure drops on the air side. It is provided with a hydrophilic treatment to reduce the surface tension between water and metal surface, promoting film condensation and avoiding the risk of condensing drops outside the drain tray.

Weld-brazed plate condenser in AISI 316 stainless steel, with pipes and patented manifold so to reach a high heat exchange coefficient. Its design allows a uniform water distribution, compatibly with pressure drops.

Condensing drain tray, made in corrosion proof peraluman, placed underneath the evaporating coil, it is provided with a flexible pipe for condensing water discharge.

Washable and self-extinguishing **air filters** efficiency G4 - of pleated type, they are made of synthetic fibre and are contained in a suitable metal frame. Their pleated arrangement, with a wide surface area, ensures a higher filtering efficiency and low pressure drops.

Cooling circuit made of: electronic thermostatic valve, sight glass, dehydrating filter, safety device, high pressure switch, solenoid valve, liquid receiver, shut-off valve on compressor discharge and on liquid line. Thanks to the electronic thermostatic valve, there is a more accurate regulation of the evaporating pressure/temperature in all working conditions, with superheating at a constant value.

Electric board in compliance with CE norms, protected by a panel is separated by the air flow and is provided with main switch, automatic switches, remote control switches, motor protection switches, low tension auxiliary circuits and terminal board for free contacts and remote general alarm, magnetothermic switches for humidifier and electric heaters (when installed).

Unit management **microprocessor** installed inside the electrical board, complete with hour counter and electronic card to program the switch-over and rotation between to units, after a pre-set time. On this purpose, in case of order, the information necessary for programming must be clearly defined. It allows a multi-language display reading, a detailed description of parameters, the possibility to manage up to 8 units, to manage non standard communication protocols, a quickest access to the program, the control of the electronic thermostatic valve and of the humidifier, the control of modulating valves.

ACCESSORIES

AA **Flooding detector:** placed in the downflow units, it is already wired and detects water in the false floor.

AE **Electrical power supply different from standard:** mainly, 230V three-phase, 460V three-phase. Frequency 50/60 Hz.

AL **Smoke alarm:** it consists of a sensor detecting smoke inside the unit and activating an alarm signal which stops the fans.

B **Adjustable base-frame** from 170mm to max 600mm for installation on raised floors. It is provided with adjustable feet.

BC **Hot water coil:** one-row or 2-row water coil, placed after the cooling coil for the re-heating and/or the heating of treated air. Provided with modulating actuator and with three-way valve, it is controlled by the microprocessor on board. This option is priority when requested with the electric heaters RE option. (Alternative to BG and not available with REM).

BG **Hot gas coil:** placed after the cooling coil, it makes the re-heating of the treated air and is provided with a 3-way valve (ON/OFF) controlled by the microprocessor on board. It is available only with the dehumidification control (options DH) (Alternative to BC and not available with HG).

BN **Base-frame with conveyor:** it is provided with a suitable conveyor facilitating the air flow and remarkably reducing the pressure drop in case of horizontal air flow. It is adjustable in height from min 400mm to max 800mm. (Only for D version).

BS **Base-frame with ON/OFF damper:** it is equipped with an ON/OFF motorized damper. This device prevents the air return from the unit when it is not working or in the case some units are working near to it. Available only for D version; for other versions, being a special execution, please contact our Sales Dept.

BSN **Base-frame with conveyor and ON/OFF damper:** a single base-frame with both options BS and BN so to optimize efficiency and overall dimensions.

CI **Soundproofing jacket on compressors:** made of soundproofing material, wrapped all around compressors so to further reduce the overall sound level of the unit.

CS **Compressors inrush counter:** Electromechanical device positioned inside the electrical board, recording the total inrush starts of compressors.

DH **Dehumidification control system:** managed by microprocessor, through the electronic thermostatic valves, it operates on two parameters, ensuring that the dehumidification process is carried out with a constant air flow, without partializing the evaporating coil. This will optimize the air distribution throughout the room.

DP **Internal double panels:** for shutting off the compartments affected by the air flow, they are made from pre-painted and galvanized steel plate, ensuring reduction in the noise transmitted through the panels and a better air tightness even without the external panels so that the access is guaranteed with the doors open during service operation.

EC-LP&HP **Single-inlet EC (electronically commutated) centrifugal fans with backward curved blade (LP not available for D version):** made of high-performance composite material, directly coupled to a three-phase electrical rotor with IP54 protection grade, they have the possibility of a continuous regulation of the speed by means of 10V signal, sent and integrated to the control. The fans are fixed on suitable supports reducing the transmission of vibration to the frame and the impeller is statically and dynamically balanced with long-life bearings. Thanks to their technology, the EC fans ensures a lower electrical absorption and sound level, if compared to the traditional centrifugal fans. It is possible to adjust their air flow to the head pressure requested on site. **In case of IT electrical supplies, please contact our Sales Dept.**

F5-F6-F7-F9 **Higher efficiency air filters:** pleated filters, supplied as an alternative to standard G4 filters.

FR **Spare filter kit G4** as a replacement to the ones on board of the unit.

H **Humidifier** of immersed-electrode type for the modulating production of steam. It is made by a steam cylinder, by a steam distributor, by water inlet and outlet valves and by a maximum level probe. The microprocessor on board indicates when the steam cylinder needs to be replaced. It is electrically protected by a magnetothermic switch.

HG **Hot gas by-pass:** it is a mechanical device for modulating the cooling capacity, so to reduce the ON/OFF of compressors and therefore to wait for the re-starting timing, with influence on condensing temperature. It is not available for sizes 1, 2 and 3 and with options BG and DH.

IE **Fumigated wooden crate packing:** available on request for critical transports, so to assure a suitable protection to the unit.

IH **RS 485 serial interface:** electronic card to be connected to microprocessor, to allow communication between the units and a Carel supervision system. It is possible to fully control the unit from remote. For connection to other supervision systems, the protocol of the controlled parameters is available on request.

IM **Seawood packing:** fumigated seawood case and protection bag with hygroscopic salts, suitable for long sea transports.

IP **Magnetothermic switches for auxiliary circuits:** when required, they replace the fuses, as a protection of the auxiliary circuits.

IS1 **Class 1 insulating material** in conformity to the main European regulations in force.

MF **Phase monitor:** electronic device controlling the correct sequence and/or the eventual lack of one of the 3 phases, switching off the unit if necessary.

MN **Lack of neutral wire for 400/3/50 power supply:** unit general power supply without neutral wire.

MP **Oversized microprocessor:** in additional to the standard microprocessor, it allows more languages display reading (maximum 5), it has an increased hardware so to allow the managing of more inputs and outputs for the control of on board installed components (Already included on two circuit units).

PB **Condensing water pump:** micro pump discharging the condensing water produced by the unit, it is factory installed.

PBH **Condensing water and humidifier discharge pump:** pump discharging the condensing water produced by the unit and the humidifier discharge water, it is factory installed.

PL **Distribution plenum** with front grid and a double raw of adjustable fins for a better air distribution (for versions U,V,B and not available with options ST and STM).

PQ **Remote display:** remote terminal, allowing to display the temperature and humidity values detected by probes, the alarm digital inputs, the outputs and the remote ON/OFF of the unit, to change and program of the parameters, the sound signal and the display of the present alarms.

PR **Fresh air inlet:** external fresh air inlet with filter, placed on side (standard on the left side), with circular connection (Ø 100 mm).

RE **Electrical heaters:** made in aluminium and installed after the cooling coil, for re-heating and/or heating of the treated air. The heating capacity is split on 3 steps max, so to reduce the energy absorption. They are controlled by the microprocessor on board and electrically protected by a magnetothermic switch.

REM **Oversized Electrical heaters.**

RF **Rephasing condensers** (available for compressors only): electrical device for rephasing the compressors charge at power factor cosΦ >0,9.

RV **Personalized frame painting in RAL colour.**

SL **Main switch with external padlock.**

ST **Manual calibration damper,** in galvanized steel plate with opposed-movement fins. Through the manual control, it is possible to accurately regulate the air flow (Alternative to STM and not available with option PL).

STM **Motorized calibration damper,** in galvanized steel plate with opposed-movement fins. Through the modulating control (0-10V), it is possible to accurately regulate the air flow (Alternative to ST and not available with option PL).

SV **Gravity overpressure damper** for ducted units, to prevent the air return when the units are not operating, where several units are installed in the same room. Available for U,V,B versions; for D version, being a special execution, please contact our Sales Dept.

TS **Touch screen graphic terminal** designed to simplify user interface with the unit controller. It allows the set-point fixing, the alarm reading, the graphic display of the main controlled parameters in real time (suitable for download on USB interface) and possibility of set-point scheduling. The 4.3", 65.000 colours and 480x422 resolution display, being a dedicated terminal for the end user, does not allow to change the basic configuration of the unit.

VCP **3-way valve** for regulation of the condensing pressure (Alternative to VP).

VP **2-way Pressostatic valve:** it is placed on condenser water side and controls the water flow rate according to the unit condensing pressure (Alternative to VCP).

WG **WebGate device** for interfacing to BMS with SNMP or TCP/IP protocols. Only available with option IH.

U Front air return Upflow air discharge

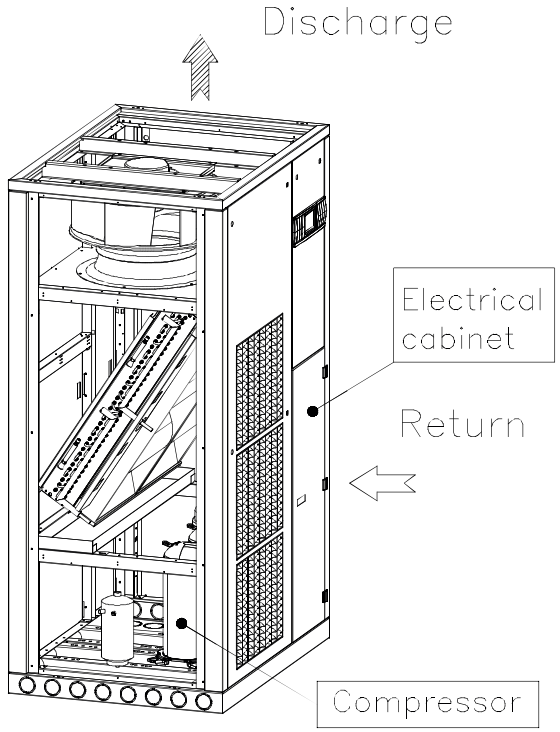

B Back air return Upflow air discharge

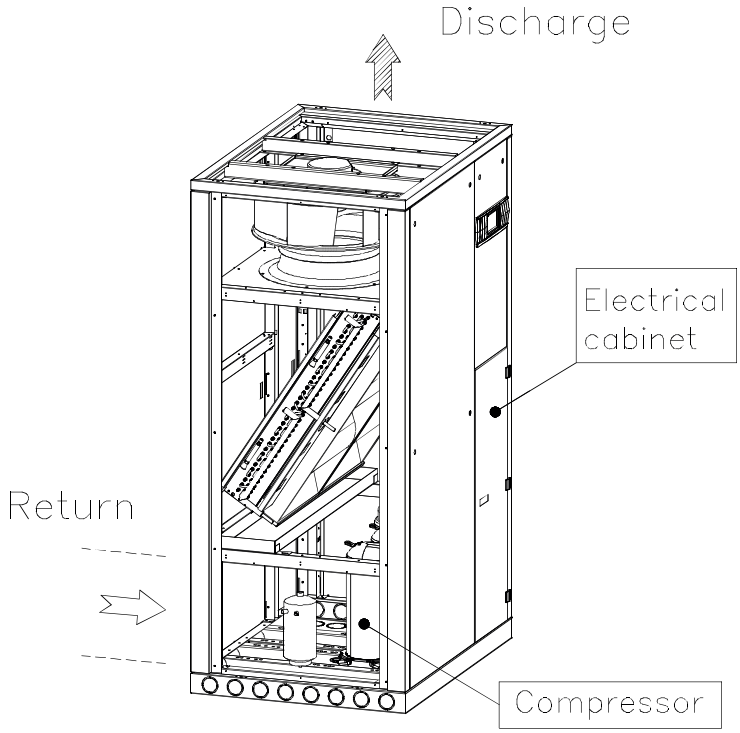

V Bottom air return Upfolw air discharge

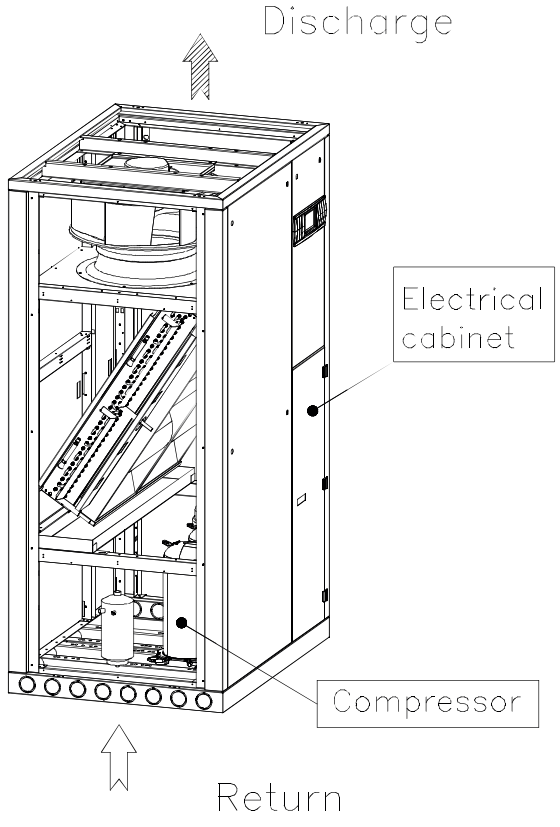

D Top air return Downflow air discharge

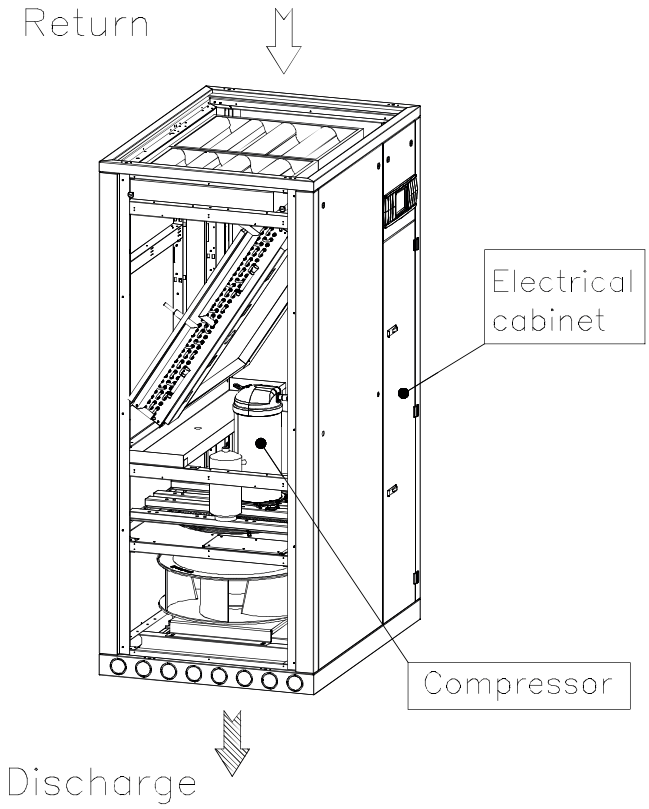

Technical data sheet - 1-circuit units - ED.H U-V-B Version

ED.H U-V-B		211 F Kc	331 F Kc	501 F Kc	771 F Kc	921 F Kc
Frame						
Frame		3	4	5	6	7
Direct expansion operation (water 30/35°C)						
Water cooled condenser - quantity	n.	1	1	1	1	1
Total cooling capacity (27°C - 50% R.H.)	kW	23,5	34,5	54,4	80,8	92,1
Sensible cooling capacity (27°C - 50% R.H.)	kW	21,4	30,1	52,4	69,4	81,1
SHR @ 27°C-50% U.R.	%	91	87	96	86	88
Nominal input power (27°C - 50% R.H.)	kW	4,4	6,5	9,5	14,1	17,1
Nominal input current (27°C - 50% R.H.)	A	9,2	15	17,2	27,2	32,9
Water flow rate	m^3/h	4,83	7,11	11,07	16,44	18,93
Water flow rate	l/s	1,34	1,97	3,07	4,57	5,26
Total cooling capacity (24°C - 50% R.H.)	kW	21,9	32	50,5	75,1	85,7
Sensible cooling capacity (24°C - 50% R.H.)	kW	20,7	29,2	49,7	67,4	78,6
SHR @ 24°C-50% U.R.	%	95	91	98	90	92
Nominal input power (24°C - 50% R.H.)	kW	4,3	6,5	9,4	13,9	16,9
Nominal input current (24°C - 50% R.H.)	A	9,3	14,9	17,1	27	32,6
Water flow rate	m^3/h	4,54	6,66	10,38	15,42	17,78
Water flow rate	l/s	1,26	1,85	2,88	4,28	4,94
Total cooling capacity (22°C - 50% R.H.)	kW	20,9	30,5	48,3	71,6	81,8
Sensible cooling capacity (22°C - 50% R.H.)	kW	20,2	28,5	48,3	65,9	77
SHR @ 22°C-50% U.R.	%	97	93	100	92	94
Nominal input power (22°C - 50% R.H.)	kW	4,3	6,4	9,3	13,8	16,7
Nominal input current (22°C - 50% R.H.)	A	9,3	14,9	17	26,8	32,3
Water flow rate	m^3/h	4,36	6,39	9,98	14,78	17,06
Water flow rate	l/s	1,21	1,77	2,77	4,11	4,74
Free cooling operation (Water IN 7°C)						
Total cooling capacity (27°C - 50% R.H.)	kW	26,6	38,8	67,6	89,3	107
Sensible cooling capacity (27°C - 50% R.H.)	kW	22,8	32,1	58,1	73,5	87,7
SHR @ 27°C-50% U.R.	%	86	83	86	82	82
Water flow rate	m^3/h	4,83	7,11	11,07	16,44	18,93
Water flow rate	l/s	1,34	1,97	3,07	4,57	5,26
Pressure drop (coil+evaporator+valve)	kPa	92	115	124	105	117
Total cooling capacity (24°C - 50% R.H.)	kW	20,3	29,6	51,5	68,2	81,7
Sensible cooling capacity (24°C - 50% R.H.)	kW	20,3	28,5	51,2	65,2	77,8
SHR @ 24°C-50% U.R.	%	100	96	99	96	95
Water flow rate	m^3/h	4,54	6,66	10,38	15,42	17,78
Water flow rate	l/s	1,26	1,85	2,88	4,28	4,94
Pressure drop (coil+evaporator+valve)	kPa	82	101	109,3	92	103
Total cooling capacity (22°C - 50% R.H.)	kW	18,3	26	46,7	59,7	71,5
Sensible cooling capacity (22°C - 50% R.H.)	kW	18,3	26	46,7	59,7	71,5
SHR @ 22°C-50% U.R.	%	100	100	100	100	100
Water flow rate	m^3/h	4,36	6,39	9,98	14,78	17,06
Water flow rate	l/s	1,21	1,77	2,77	4,11	4,74
Pressure drop (coil+evaporator+valve)	kPa	76	94	101	85	96
Direct expansion operation (water 40/45°C)						
Water cooled condenser - quantity	n.	1	1	1	1	1
Total cooling capacity (27°C - 50% R.H.)	kW	21,1	31	48,8	72,9	83,2
Sensible cooling capacity (27°C - 50% R.H.)	kW	20,5	28,7	48,8	66,4	77,7
SHR @ 27°C-50% U.R.	%	97	93	100	91	93
Nominal input power (27°C - 50% R.H.)	kW	5,4	7,9	11,7	17,6	21
Nominal input current (27°C - 50% R.H.)	A	10,9	15	20	31,5	37,5
Water flow rate	m^3/h	4,62	6,77	10,53	15,72	18,1
Water flow rate	l/s	1,28	1,88	2,92	4,37	5,03
Total cooling capacity (24°C - 50% R.H.)	kW	19,9	29,1	46,3	68,6	78,3
Sensible cooling capacity (24°C - 50% R.H.)	kW	19,9	27,9	46,3	64,6	75,5
SHR @ 24°C-50% U.R.	%	100	96	100	94	96
Nominal input power (24°C - 50% R.H.)	kW	5,3	7,7	11,3	17	20,3
Nominal input current (24°C - 50% R.H.)	A	10,9	14,9	19,5	30,7	36,6
Water flow rate	m^3/h	4,38	6,4	10,02	14,87	17,13
Water flow rate	l/s	1,22	1,78	2,78	4,13	4,76
Total cooling capacity (22°C - 50% R.H.)	kW	18,7	27,3	43,7	64,2	73,4
Sensible cooling capacity (22°C - 50% R.H.)	kW	18,7	27,1	43,7	62,6	73,2
SHR @ 22°C-50% U.R.	%	100	99	100	97	100
Nominal input power (22°C - 50% R.H.)	kW	5,4	7,8	11,6	17,4	20,7
Nominal input current (22°C - 50% R.H.)	A	11,2	14,9	19,8	31,2	37,1
Water flow rate	m^3/h	4,19	6,11	9,6	14,18	16,35
Water flow rate	l/s	1,16	1,7	2,67	3,94	4,54

Technical data sheet - 1-circuit units - ED.H U-V-B Version

ED.H U-V-B		211 F Kc	331 F Kc	501 F Kc	771 F Kc	921 F Kc
Frame						
Frame		3	4	5	6	7
Free cooling operation (Water IN 7°C)						
Total cooling capacity (27°C - 50% R.H.)	kW	26,2	38,1	66,3	88	105,4
Sensible cooling capacity (27°C - 50% R.H.)	kW	22,6	31,8	57,6	72,9	87,1
SHR @ 27°C-50% U.R.	%	86	83	87	83	83
Water flow rate	m^3/h	4,62	6,77	10,53	15,72	18,1
Water flow rate	l/s	1,28	1,88	2,92	4,37	5,03
Pressure drop (coil+evaporator+valve)	kPa	84	104	112	95	107
Total cooling capacity (24°C - 50% R.H.)	kW	20	29,2	52,8	67,3	80,6
Sensible cooling capacity (24°C - 50% R.H.)	kW	20	28,3	52,8	64,8	77,4
SHR @ 24°C-50% U.R.	%	100	97	100	96	96
Water flow rate	m^3/h	4,38	6,4	10,02	14,87	17,13
Water flow rate	l/s	1,22	1,78	2,78	4,13	4,76
Pressure drop (coil+evaporator+valve)	kPa	76	94	101	86	96
Total cooling capacity (22°C - 50% R.H.)	kW	18,1	25,8	46,3	59,3	70,9
Sensible cooling capacity (22°C - 50% R.H.)	kW	18,1	25,8	46,3	59,3	70,9
SHR @ 22°C-50% U.R.	%	100	100	100	100	100
Water flow rate	m^3/h	4,19	6,11	9,6	14,18	16,35
Water flow rate	l/s	1,16	1,7	2,67	3,94	4,54
Pressure drop (coil+evaporator+valve)	kPa	70	85	94	78	88
Scroll compressors						
Quantity	n.	1	1	1	1	2
Circuits	n.	1	1	1	1	1
Capacity steps	%	0 / 100	0 / 100	0 / 100	0 / 100	0 / 50 / 100
Max input current	A	19	25	33	51	66
Inrush current	A	87	110	158	215	191
AC fans with autotransformer						
Quantity	n.	1	1	2	2	3
Fan(s) supply voltage	V	310	260	260	310	250
Air flow	m^3/h	5.200	7.100	13.300	16.200	19.300
Available pressure	Pa	20	20	20	20	20
Rotation speed	rpm	1.282	1.162	1.153	1.242	1.140
Input power	kW	1,11	1,61	3,2	3,6	4,71
Input current	A	2,12	2,77	5,45	6,46	8
Max available pressure (max ESP)	Pa	104	229	236	128	247
Sound pressure level @ 2 m - U Version	dB(A)	58	60	62	68	64
Sound pressure level @ 2 m - U Version (max ESP)	dB(A)	60	63	65	69	67
Sound pressure level @ 2 m - B Version	dB(A)	55	57	58	65	60
Sound pressure level @ 2 m - B Version (max ESP)	dB(A)	57	59	61	65	63
Sound pressure level @ 2 m - V Version	dB(A)	54	56	57	64	59
Sound pressure level @ 2 m - V Version (max ESP)	dB(A)	56	58	60	64	62
EC Fans - LP (low pressure)						
Quantity	n.	1	1	2	2	3
Fan(s) supply voltage	V	400	400	400	400	400
Air flow	m^3/h	5.200	7.100	13.300	16.220	19.300
Max available pressure (max ESP)	Pa	146	146	153	39	164
Rotation speed	rpm	1.267	1.115	1.107	1.197	1.094
Input power	kW	0,91	1,15	2,26	2,77	3,29
Input current	A	1,46	1,84	3,63	4,44	5,28
Sound pressure level @ 2 m - U Version	dB(A)	58	59	60	67	62
Sound pressure level @ 2 m - U Version (max ESP)	dB(A)	59	60	61	66	63
Sound pressure level @ 2 m - B Version	dB(A)	54	56	57	64	59
Sound pressure level @ 2 m - B Version (max ESP)	dB(A)	55	56	58	64	60
Sound pressure level @ 2 m - V Version	dB(A)	53	55	56	63	58
Sound pressure level @ 2 m - V Version (max ESP)	dB(A)	54	55	57	63	59
EC Fans - HP (High pressure)						
Quantity	n.	1	1	2	2	3
Fan(s) supply voltage	V	400	400	400	400	400
Air flow	m^3/h	5.200	7.100	13.300	16.220	19.300
Max available pressure (max ESP)	Pa	627	577	583	479	594
Rotation speed	rpm	1.261	1.113	1.104	1.196	1.091
Input power	kW	0,94	1,12	2,21	2,7	3,22
Input current	A	1,5	1,8	3,55	4,33	5,17
Sound pressure level @ 2 m - U Version	dB(A)	59	60	61	68	63
Sound pressure level @ 2 m - U Version (max ESP)	dB(A)	64	63	66	69	68
Sound pressure level @ 2 m - B Version	dB(A)	55	56	57	64	59
Sound pressure level @ 2 m - B Version (max ESP)	dB(A)	61	60	63	65	65
Sound pressure level @ 2 m - V Version	dB(A)	54	55	56	63	58
Sound pressure level @ 2 m - V Version (max ESP)	dB(A)	60	59	62	64	64

Technical data sheet - 1-circuit units - ED.H U-V-B Version

ED.H U-V-B		211 F Kc	331 F Kc	501 F Kc	771 F Kc	921 F Kc
Frame						
Frame		3	4	5	6	7
Humidifier						
Steam production (nominal)	kg/h	5	8	8	8	8
Steam production (max)	kg/h	8	8	8	8	8
Maximum input power	kW	3,75	6	6	6	6
Maximum input current	A	5,5	8,7	8,7	8,7	8,7
Specific conductivity at 20°C (min/max)	µS/cm	300 / 1250				
Total hardness (min/max)	mg/l CaCo3	100 / 400				
Electrical heaters						
Steps	n.	2	3	3	3	3
Power	kW	6	9	15	18	24
Input current	A	8,7	13	21,7	26	34,6
Oversized electrical heaters						
Steps	n.	3	3	3	3	3
Power	kW	9	12	18	24	27
Input current	A	13	17,3	26	34,6	39
Hot water coil						
Heating capacity	kW	10,2	19,7	35,5	43,6	54,1
Water flow rate	m^3/h	1,8	3,4	6,1	7,5	9,4
Pressure drop (coil+3-way valve)	kPa	55	76	79	70	78
Internal volume of the coil	dm^3	2,1	3,8	6,4	7,7	8,7
Hot gas coil						
Heating capacity	kW	11	18	32	39	49
Condensing water pump						
Nominal water flow	l/h	390	390	390	390	390
Max water flow (pressure = 0 m)	l/h	500	500	500	500	500
Max height (water flow = 0 m^3/h)	m	5,4	5,4	5,4	5,4	5,4
Condensing water pump + humidifier						
Nominal water flow	l/h	-	600	600	600	600
Max water flow (pressure = 0 m)	l/h	-	900	900	900	900
Max height (water flow = 0 m^3/h)	m	-	6,0	6,0	6,0	6,0
Dimensions						
Length	mm	980	1.160	1.860	2.210	2.565
Width	mm	750	850	850	850	850
Height	mm	1.980	1.980	1.980	1.980	1.980
Weight - U Version	kg	343	424	597	720	865
Weight - V Version	kg	349	419	607	731	876
Weight - B Version	kg	354	424	618	737	887
Power supply						
Power supply	V / ph / Hz	400 / 3 / 50 + T + N				

REMARKS

- Filters calculated for 20% dirt.
- Max pressure is referred to the nominal air flow and the max tension/regulation.
- Hot water coil calculated for: water 40/45°C, ambient temperature 20°C and available pressure of 20 Pa.
- Sound pressure level measured at 2 m in open field (ISO 3744) with ducted air inlet and dicharge.
- The condensing / condensing+humidifier water pump is calculated for a 2 m vertical difference in height respect to the pump; total length of the discharge pipe of 5 m, internal diameter of flexible pipe of 12 mm.
- The condenser pressure drop does not include the pressostatic valve.

Technical data sheet - 2-circuits units - ED.H U-V-B version

ED.H U-V-B		332 F Kc	502 F Kc	772 F Kc	922 F Kc	1442 F Kc	1462 F Kc
Frame							
Frame		4	5	6	7	8	8
Direct expansion operation (water 30/35°C)							
Water cooled condenser - quantity	n.	2	2	2	2	1	1
Total cooling capacity (27°C - 50% R.H.)	kW	34,7	56,2	79,2	92,1	115,6	110,6
Sensible cooling capacity (27°C - 50% R.H.)	kW	30,2	53,1	68,8	81,1	102	100
SHR @ 27°C-50% U.R.	%	87	95	87	88	88	90
Nominal input power (27°C - 50% R.H.)	kW	6,8	9,9	15,1	17,1	18,2	17,6
Nominal input current (27°C - 50% R.H.)	A	12,1	20,7	31,7	32,9	38,4	32,7
Water flow rate	m^3/h	7,19	11,46	16,33	18,93	23,17	22,2
Water flow rate	l/s	2	3,18	4,54	5,26	6,44	6,17
Total cooling capacity (24°C - 50% R.H.)	kW	32,2	52,2	73,6	85,7	107,3	102,8
Sensible cooling capacity (24°C - 50% R.H.)	kW	29,2	51,3	66,7	78,6	98,7	96,9
SHR @ 24°C-50% U.R.	%	91	98	91	92	92	94
Nominal input power (24°C - 50% R.H.)	kW	6,8	9,9	14,8	16,9	18,2	17,4
Nominal input current (24°C - 50% R.H.)	A	12,3	21,1	31,4	32,6	39,1	32,4
Water flow rate	m^3/h	6,76	10,77	15,32	17,78	21,72	20,81
Water flow rate	l/s	1,88	2,99	4,26	4,94	6,03	5,78
Total cooling capacity (22°C - 50% R.H.)	kW	30,7	49,8	70,3	81,8	102,2	98
Sensible cooling capacity (22°C - 50% R.H.)	kW	28,6	49,2	65,4	77	96,5	94,7
SHR @ 22°C-50% U.R.	%	93	99	93	94	94	97
Nominal input power (22°C - 50% R.H.)	kW	6,7	9,9	14,5	16,7	18,1	17,1
Nominal input current (22°C - 50% R.H.)	A	12,3	21,2	31,1	32,3	39,4	32,2
Water flow rate	m^3/h	6,49	10,33	14,7	17,06	20,82	19,94
Water flow rate	l/s	1,8	2,87	4,08	4,74	5,78	5,54
Free cooling operation (Water IN 7°C)							
Total cooling capacity (27°C - 50% R.H.)	kW	38,9	68,4	89,1	107	137,2	135,4
Sensible cooling capacity (27°C - 50% R.H.)	kW	32,1	58,4	73,4	87,7	111,4	110,7
SHR @ 27°C-50% U.R.	%	82	85	82	82	81	82
Water flow rate	m^3/h	7,19	11,46	16,33	18,93	23,17	22,2
Water flow rate	l/s	2	3,18	4,54	5,26	6,44	6,17
Pressure drop (coil+evaporator+valve)	kPa	105	111	109	125	157	145
Total cooling capacity (24°C - 50% R.H.)	kW	29,7	52,2	68	81,7	104,8	103,4
Sensible cooling capacity (24°C - 50% R.H.)	kW	28,5	51,9	65,1	77,8	98,8	98,2
SHR @ 24°C-50% U.R.	%	96	99	96	95	94	95
Water flow rate	m^3/h	6,76	10,77	15,32	17,78	21,7	20,81
Water flow rate	l/s	1,88	2,99	4,26	4,94	6,03	5,78
Pressure drop (coil+evaporator+valve)	kPa	93	98	96	111	138	128
Total cooling capacity (22°C - 50% R.H.)	kW	26,1	47,1	59,7	71,5	91,1	90,4
Sensible cooling capacity (22°C - 50% R.H.)	kW	26,1	47,1	59,7	71,5	91,1	90,4
SHR @ 22°C-50% U.R.	%	100	100	100	100	100	100
Water flow rate	m^3/h	6,49	10,33	14,7	17,06	20,82	19,94
Water flow rate	l/s	1,8	2,87	4,08	4,74	5,78	5,54
Pressure drop (coil+evaporator+valve)	kPa	87	91	89	103	128	119
Direct expansion operation (water 40/45°C)							
Water cooled condenser - quantity	n.	2	2	2	2	1	1
Total cooling capacity (27°C - 50% R.H.)	kW	31,1	50,1	71,4	83,2	103,7	100,3
Sensible cooling capacity (27°C - 50% R.H.)	kW	28,8	49,9	65,8	77,7	97,5	96,1
SHR @ 27°C-50% U.R.	%	93	100	92	93	94	96
Nominal input power (27°C - 50% R.H.)	kW	8,6	12,1	18,5	21	22,3	21,6
Nominal input current (27°C - 50% R.H.)	A	14,4	24,7	36,4	37,5	46	37,6
Water flow rate	m^3/h	6,89	10,8	15,62	18,1	21,9	21,19
Water flow rate	l/s	1,91	3	4,34	5,03	6,08	5,89
Total cooling capacity (24°C - 50% R.H.)	kW	29,2	47,5	67,1	78,3	97,6	94,4
Sensible cooling capacity (24°C - 50% R.H.)	kW	28	47,5	64	75,5	94,7	93,4
SHR @ 24°C-50% U.R.	%	96	100	95	96	97	99
Nominal input power (24°C - 50% R.H.)	kW	8,3	11,8	17,7	20,3	21,8	20,8
Nominal input current (24°C - 50% R.H.)	A	14,3	24,6	35,3	36,6	45,9	36,7
Water flow rate	m^3/h	6,53	10,31	14,75	17,13	20,74	20,02
Water flow rate	l/s	1,82	2,86	4,1	4,76	5,76	5,56
Total cooling capacity (22°C - 50% R.H.)	kW	27,4	44,9	62,9	73,4	91,6	88,7
Sensible cooling capacity (22°C - 50% R.H.)	kW	27,1	44,9	62	73,4	90,1	88,7
SHR @ 22°C-50% U.R.	%	99	100	99	100	98	100
Nominal input power (22°C - 50% R.H.)	kW	8,6	12,1	17,9	20,7	22,3	21,2
Nominal input current (22°C - 50% R.H.)	A	14,6	25,3	35,7	37,1	47,2	37,2
Water flow rate	m^3/h	6,25	9,89	14,05	16,35	19,79	19,1
Water flow rate	l/s	1,74	2,75	3,9	4,54	5,5	5,31

Technical data sheet - 2-circuits units - ED.H U-V-B version

ED.H U-V-B		332 F Kc	502 F Kc	772 F Kc	922 F Kc	1442 F Kc	1462 F Kc
Frame							
Frame		4	5	6	7	8	8
Free cooling operation (Water IN 7°C)							
Total cooling capacity (27°C - 50% R.H.)	kW	38,4	66,9	87,8	105,4	134,7	133,2
Sensible cooling capacity (27°C - 50% R.H.)	kW	31,9	57,8	72,9	87,1	110,4	109,8
SHR @ 27°C-50% U.R.	%	83	86	83	83	82	82
Water flow rate	m^3/h	6,89	10,8	15,62	18,1	21,9	21,19
Water flow rate	l/s	1,91	3	4,34	5,03	6,08	5,89
Pressure drop (coil+evaporator+valve)	kPa	97	99	100	115	141	132
Total cooling capacity (24°C - 50% R.H.)	kW	29,4	51,3	67,1	71,6	103,2	102
Sensible cooling capacity (24°C - 50% R.H.)	kW	28,4	51,1	64,8	71,6	98,1	97,5
SHR @ 24°C-50% U.R.	%	97	100	97	100	95	96
Water flow rate	m^3/h	6,53	10,31	14,75	17,13	20,74	20,02
Water flow rate	l/s	1,82	2,86	4,1	4,76	5,76	5,56
Pressure drop (coil+evaporator+valve)	kPa	87	90	89	103	97	119
Total cooling capacity (22°C - 50% R.H.)	kW	25,9	46,6	62,9	70,9	90,3	89,7
Sensible cooling capacity (22°C - 50% R.H.)	kW	25,9	46,6	62	70,9	90,3	89,7
SHR @ 22°C-50% U.R.	%	100	100	99	100	100	100
Water flow rate	m^3/h	6,25	9,89	14,05	16,35	19,79	19,1
Water flow rate	l/s	1,74	2,75	3,9	4,54	5,5	5,31
Pressure drop (coil+evaporator+valve)	kPa	80	83	55	95	116	109
Scroll compressors							
Quantity	n.	2	2	2	2	4	2
Circuits	n.	2	2	2	2	2	2
Capacity steps	%	0 / 50 / 100					
Max input current	A	30	38	54	66	108	102
Inrush current	A	85	119	167	191	221	266
AC fans with autotransformer							
Quantity	n.	1	2	2	3	4	4
Fan(s) supply voltage	V	260	260	310	250	250	250
Air flow	m^3/h	7.100	13.300	16.200	19.300	24.300	24.300
Available pressure	Pa	20	20	20	20	20	20
Rotation speed	rpm	1.162	1.153	1.242	1.140	1.130	1.130
Input power	kW	1,61	3,2	3,6	4,71	6,18	6,18
Input current	A	2,77	5,45	6,46	8	10,48	10,48
Max available pressure (max ESP)	Pa	229	236	128	247	256	256
Sound pressure level @ 2 m - U Version	dB(A)	59	62	65	64	65	65
Sound pressure level @ 2 m - U Version (max ESP)	dB(A)	62	65	66	67	68	68
Sound pressure level @ 2 m - B Version	dB(A)	56	59	62	60	61	61
Sound pressure level @ 2 m - B Version (max ESP)	dB(A)	58	61	63	63	64	64
Sound pressure level @ 2 m - V Version	dB(A)	55	58	61	59	60	60
Sound pressure level @ 2 m - V Version (max ESP)	dB(A)	57	60	62	62	63	63
EC Fans - LP (low pressure)							
Quantity	n.	1	2	2	3	4	4
Fan(s) supply voltage	V	400	400	400	400	400	400
Air flow	m^3/h	7.100	13.300	16.200	19.300	24.300	24.300
Max available pressure (max ESP)	Pa	146	153	39	164	173	173
Rotation speed	rpm	1.115	1.107	1.197	1.094	1.085	1.085
Input power	kW	1,15	2,26	2,77	3,29	4,29	4,29
Input current	A	1,84	3,63	4,44	5,28	6,89	6,89
Sound pressure level @ 2 m - U Version	dB(A)	57	61	63	62	64	63
Sound pressure level @ 2 m - U Version (max ESP)	dB(A)	58	62	63	63	65	65
Sound pressure level @ 2 m - B Version	dB(A)	54	57	60	59	60	60
Sound pressure level @ 2 m - B Version (max ESP)	dB(A)	55	58	60	60	61	61
Sound pressure level @ 2 m - V Version	dB(A)	53	56	59	58	59	59
Sound pressure level @ 2 m - V Version (max ESP)	dB(A)	54	57	59	59	60	60
EC Fans - HP (High pressure)							
Quantity	n.	1	2	2	3	4	4
Fan(s) supply voltage	V	400	400	400	400	400	400
Air flow	m^3/h	7.100	13.300	16.200	19.300	24.300	24.300
Max available pressure (max ESP)	Pa	577	583	479	594	601	601
Rotation speed	rpm	1.113	1.107	1.196	1.091	1.080	1.080
Input power	kW	1,12	2,26	2,7	3,22	4,2	4,2
Input current	A	1,8	3,63	4,33	5,17	6,74	6,74
Sound pressure level @ 2 m - U Version	dB(A)	58	61	64	63	64	64
Sound pressure level @ 2 m - U Version (max ESP)	dB(A)	63	66	66	68	70	70
Sound pressure level @ 2 m - B Version	dB(A)	54	58	60	59	61	60
Sound pressure level @ 2 m - B Version (max ESP)	dB(A)	59	63	63	65	66	66
Sound pressure level @ 2 m - V Version	dB(A)	53	57	59	58	60	59
Sound pressure level @ 2 m - V Version (max ESP)	dB(A)	58	62	62	64	65	65

Technical data sheet - 2-circuits units - ED.H U-V-B version

ED.H U-V-B		332 F Kc	502 F Kc	772 F Kc	922 F Kc	1442 F Kc	1462 F Kc
Frame							
Frame		4	5	6	7	8	8
Humidifier							
Steam production (nominal)	kg/h	8	8	8	8	8	8
Steam production (max)	kg/h	8	8	8	8	8	8
Maximum input power	kW	6	6	6	6	6	6
Maximum input current	A	8,7	8,7	8,7	8,7	8,7	8,7
Specific conductivity at 20°C (min/max)	µS/cm	300 / 1250					
Total hardness (min/max)	mg/l CaCo3	100 / 400					
Electrical heaters							
Steps	n.	3	3	3	3	3	3
Power	kW	9	15	18	24	27	27
Input current	A	13	21,7	26	34,6	39	39
Oversized electrical heaters							
Steps	n.	3	3	3	3	3	3
Power	kW	12	18	24	27	36	36
Input current	A	17,3	26	34,6	39	52	52
Hot water coil							
Heating capacity	kW	19,7	35,5	43,6	54,1	73,2	73,2
Water flow rate	m^3/h	3,4	6,1	7,5	9,4	12,8	12,8
Pressure drop (coil+3-way valve)	kPa	76	79	70	78	81	81
Internal volume of the coil	dm^3	3,8	6,4	7,7	8,7	15,3	15,3
Hot gas coil							
Heating capacity	kW	18	32	39	49	60	60
Condensing water pump							
Nominal water flow	l/h	390	390	390	390	390	390
Max water flow (pressure = 0 m)	l/h	500	500	500	500	500	500
Max height (water flow = 0 m^3/h)	m	5,4	5,4	5,4	5,4	5,4	5,4
Condensing water pump + humidifier							
Nominal water flow	l/h	600	600	600	600	600	600
Max water flow (pressure = 0 m)	l/h	900	900	900	900	900	900
Max height (water flow = 0 m^3/h)	m	6,0	6,0	6,0	6,0	6,0	6,0
Dimensions							
Length	mm	1.160	1.860	2.210	2.565	3.100	3.100
Width	mm	850	850	850	850	850	850
Height	mm	1.980	1.980	1.980	1.980	1.980	1.980
Weight - U Version	kg	457	603	720	881	1.091	1.081
Weight - V Version	kg	452	614	731	892	1.091	1.081
Weight - B Version	kg	457	624	737	903	1.102	1.091
Power supply							
Power supply	V / ph / Hz	400 / 3 / 50 + T + N					

REMARKS

- Filters calculated for 20% dirt.
- Max pressure is referred to the nominal air flow and the max tension/regulation.
- Hot water coil calculated for: water 40/45°C, ambient temperature 20°C and available pressure of 20 Pa.
- Sound pressure level measured at 2 m in open field (ISO 3744) with ducted air inlet and dicharge.
- The condensing / condensing+humidifier water pump is calculated for a 2 m vertical difference in height respect to the pump; total length of the discharge pipe of 5 m, internal diameter of flexible pipe of 12 mm.
- The condenser pressure drop does not include the pressostatic valve.

Technical data sheet - 1-circuit units - ED.H D version

ED.H D		211 F Kc	331 F Kc	501 F Kc	771 F Kc	921 F Kc
Frame						
Frame		3	4	5	6	7
Direct expansion operation (water 30/35°C)						
Water cooled condenser - quantity	n.	1	1	1	1	1
Total cooling capacity (27°C - 50% R.H.)	kW	23,5	34,5	54,4	80,8	92,1
Sensible cooling capacity (27°C - 50% R.H.)	kW	21,4	30,1	52,4	69,4	81,1
SHR @ 27°C-50% U.R.	%	91	87	96	86	88
Nominal input power (27°C - 50% R.H.)	kW	4,4	6,5	9,5	14,1	17,1
Nominal input current (27°C - 50% R.H.)	A	9,2	15	17,2	27,2	32,9
Water flow rate	m^3/h	4,83	7,11	11,07	16,44	18,93
Water flow rate	l/s	1,34	1,97	3,07	4,57	5,26
Total cooling capacity (24°C - 50% R.H.)	kW	21,9	32	50,5	75,1	85,7
Sensible cooling capacity (24°C - 50% R.H.)	kW	20,7	29,2	49,7	67,4	78,6
SHR @ 24°C-50% U.R.	%	95	91	98	90	92
Nominal input power (24°C - 50% R.H.)	kW	4,3	6,5	9,4	13,9	16,9
Nominal input current (24°C - 50% R.H.)	A	9,3	14,9	17,1	27	32,6
Water flow rate	m^3/h	4,54	6,66	10,38	15,42	17,78
Water flow rate	l/s	1,26	1,85	2,88	4,28	4,94
Total cooling capacity (22°C - 50% R.H.)	kW	20,9	30,5	48,3	71,6	81,8
Sensible cooling capacity (22°C - 50% R.H.)	kW	20,2	28,5	48,3	65,9	77
SHR @ 22°C-50% U.R.	%	97	93	100	92	94
Nominal input power (22°C - 50% R.H.)	kW	4,3	6,4	9,3	13,8	16,7
Nominal input current (22°C - 50% R.H.)	A	9,3	14,9	17	26,8	32,3
Water flow rate	m^3/h	4,36	6,39	9,98	14,78	17,06
Water flow rate	l/s	1,21	1,77	2,77	4,11	4,74
Free cooling operation (Water IN 7°C)						
Total cooling capacity (27°C - 50% R.H.)	kW	26,6	38,8	67,6	89,3	107
Sensible cooling capacity (27°C - 50% R.H.)	kW	22,8	32,1	58,1	73,5	87,7
SHR @ 27°C-50% U.R.	%	86	83	86		82
Water flow rate	m^3/h	4,83	7,11	11,07	16,44	18,93
Water flow rate	l/s	1,34	1,97	3,07	4,57	5,26
Pressure drop (coil+evaporator+valve)	kPa	92	115	124	105	117
Total cooling capacity (24°C - 50% R.H.)	kW	20,3	29,6	51,5	68,2	81,7
Sensible cooling capacity (24°C - 50% R.H.)	kW	20,3	28,5	51,2	65,2	77,8
SHR @ 24°C-50% U.R.	%	100	96	99	96	95
Water flow rate	m^3/h	4,54	6,66	10,38	15,42	17,78
Water flow rate	l/s	1,26	1,85	2,88	4,28	4,94
Pressure drop (coil+evaporator+valve)	kPa	82	101	109,3	92	103
Total cooling capacity (22°C - 50% R.H.)	kW	18,3	26	46,7	59,7	71,5
Sensible cooling capacity (22°C - 50% R.H.)	kW	18,3	26	46,7	59,7	71,5
SHR @ 22°C-50% U.R.	%	100	100	100	100	100
Water flow rate	m^3/h	4,36	6,39	9,98	14,78	17,06
Water flow rate	l/s	1,21	1,77	2,77	4,11	4,74
Pressure drop (coil+evaporator+valve)	kPa	76	94	101	85	96
Direct expansion operation (water 40/45°C)						
Water cooled condenser - quantity	n.	1	1	1	1	1
Total cooling capacity (27°C - 50% R.H.)	kW	21,1	31	48,8	72,9	83,2
Sensible cooling capacity (27°C - 50% R.H.)	kW	20,5	28,7	48,8	66,4	77,7
SHR @ 27°C-50% U.R.	%	97	93	100	91	93
Nominal input power (27°C - 50% R.H.)	kW	5,4	7,9	11,7	17,6	21
Nominal input current (27°C - 50% R.H.)	A	10,9	15	20	31,5	37,5
Water flow rate	m^3/h	4,62	6,77	10,53	15,72	18,1
Water flow rate	l/s	1,28	1,88	2,92	4,37	5,03
Total cooling capacity (24°C - 50% R.H.)	kW	19,9	29,1	46,3	68,6	78,3
Sensible cooling capacity (24°C - 50% R.H.)	kW	19,9	27,9	46,3	64,6	75,5
SHR @ 24°C-50% U.R.	%	100	96	100	94	96
Nominal input power (24°C - 50% R.H.)	kW	5,3	7,7	11,3	17	20,3
Nominal input current (24°C - 50% R.H.)	A	10,9	14,9	19,5	30,7	36,6
Water flow rate	m^3/h	4,38	6,4	10,02	14,87	17,13
Water flow rate	l/s	1,22	1,78	2,78	4,13	4,76
Total cooling capacity (22°C - 50% R.H.)	kW	18,7	27,3	43,7	64,2	73,4
Sensible cooling capacity (22°C - 50% R.H.)	kW	18,7	27,1	43,7	62,6	73,2
SHR @ 22°C-50% U.R.	%	100	99	100	97	100
Nominal input power (22°C - 50% R.H.)	kW	5,4	7,8	11,6	17,4	20,7
Nominal input current (22°C - 50% R.H.)	A	11,2	14,9	19,8	31,2	37,1
Water flow rate	m^3/h	4,19	6,11	9,6	14,18	16,35
Water flow rate	l/s	1,16	1,7	2,67	3,94	4,54
Free cooling operation (Water IN 7°C) (part 1)						
Total cooling capacity (27°C - 50% R.H.)	kW	26,2	38,1	66,3	88	105,4
Sensible cooling capacity (27°C - 50% R.H.)	kW	22,6	31,8	57,6	72,9	87,1
SHR @ 27°C-50% U.R.	%	86	83	87	83	83
Water flow rate	m^3/h	4,62	6,77	10,53	15,72	18,1
Water flow rate	l/s	1,28	1,88	2,92	4,37	5,03
Pressure drop (coil+evaporator+valve)	kPa	84	104	112	95	107
Total cooling capacity (24°C - 50% R.H.)	kW	20	29,2	52,8	67,3	80,6
Sensible cooling capacity (24°C - 50% R.H.)	kW	20	28,3	52,8	64,8	77,4
SHR @ 24°C-50% U.R.	%	100	97	100	96	96
Water flow rate	m^3/h	4,38	6,4	10,02	14,87	17,13

Technical data sheet - 1-circuit units - ED.H D version

ED.H D		211 F Kc	331 F Kc	501 F Kc	771 F Kc	921 F Kc
Frame						
Frame		3	4	5	6	7
Free cooling operation (Water IN 7°C) (part 2)						
Water flow rate	l/s	1,22	1,78	2,78	4,13	4,76
Pressure drop (coil+evaporator+valve)	kPa	76	94	101	86	96
Total cooling capacity (22°C - 50% R.H.)	kW	18,1	25,8	46,3	59,3	70,9
Sensible cooling capacity (22°C - 50% R.H.)	kW	18,1	25,8	46,3	59,3	70,9
SHR @ 22°C-50% U.R.	%	100	100	100	100	100
Water flow rate	m^3/h	4,19	6,11	9,6	14,18	16,35
Water flow rate	l/s	1,16	1,7	2,67	3,94	4,54
Pressure drop (coil+evaporator+valve)	kPa	70	85	94	78	88
Scroll compressors						
Quantity	n.	1	1	1	1	2
Circuits	n.	1	1	1	1	1
Capacity steps	%	0 / 100	0 / 100	0 / 100	0 / 100	0 / 50 / 100
Max input current	A	19	25	33	51	66
Inrush current	A	87	110	158	215	191
AC fans with autotransformer						
Quantity	n.	1	1	2	2	3
Fan(s) supply voltage	V	320	290	290	360	290
Air flow	m^3/h	5.200	7.100	13.300	16.200	19.300
Available pressure	Pa	20	20	20	20	20
Rotation speed	rpm	1.297	1.218	1.217	1.299	1.215
Input power	kW	1,14	1,77	3,54	3,97	5,29
Input current	A	2,21	3,08	6,13	7,41	9,15
Max available pressure (max ESP)	Pa	89	169	168	58	169
Sound pressure level @ 2 m - D Version	dB(A)	55	57	60	65	61
Sound pressure level @ 2 m - D Version (max ESP)	dB(A)	57	59	62	65	64
EC Fans - HP (High pressure)						
Quantity	n.	1		2		3
Fan(s) supply voltage	V			400		
Air flow	m^3/h	5.200	7.100	13.300	16.200	19.300
Max available pressure (max ESP)	Pa	613	517	515	409	515
Rotation speed	rpm	1.275	1.168	1.166	1.254	1.164
Input power	kW	0,97	1,31	2,64	3,18	3,96
Input current	A	1,56	2,11	4,24	5,11	6,34
Sound pressure level @ 2 m - D Version	dB(A)	55	56	58	64	60
Sound pressure level @ 2 m - D Version (max ESP)	dB(A)	62	60	63	65	65
Humidifier						
Steam production (nominal)	kg/h	5	8	8	8	8
Steam production (max)	kg/h	8	8	8	8	8
Maximum input power	kW	3,75	6	6	6	6
Maximum input current	A	5,5	8,7	8,7	8,7	8,7
Specific conductivity at 20°C (min/max)	µS/cm			300 / 1250		
Total hardness (min/max)	mg/l CaCo3			100 / 400		
Electrical heaters						
Steps	n.	2	3	3	3	3
Power	kW	6	9	15	18	24
Input current	A	8,7	13	21,7	26	34,6
Oversized electrical heaters						
Steps	n.	3	3	3	3	3
Power	kW	9	12	18	24	27
Input current	A	13	17,3	26	34,6	39
Hot water coil						
Heating capacity	kW	10,2	19,7	35,5	43,6	54,1
Water flow rate	m^3/h	1,8	3,4	6,1	7,5	9,4
Pressure drop (coil+3-way valve)	kPa	55	76	79	70	78
Internal volume of the coil	dm^3	2,1	3,8	6,4	7,7	8,7
Hot gas coil						
Heating capacity	kW	11	18	32	39	49
Condensing water pump						
Nominal water flow	l/h	390	390	390	390	390
Max water flow (pressure = 0 m)	l/h	500	500	500	500	500
Max height (water flow = 0 m^3/h)	m	5,4	5,4	5,4	5,4	5,4
Dimensions						
Length	mm	980	1.160	1.860	2.210	2.565
Width	mm	750	850	850	850	850
Height	mm	1.980	1.980	1.980	1.980	1.980
Weight - D Version	kg	354	424	629	747	881
Power supply						
Power supply	V / ph / Hz			400 / 3 / 50 + T + N		

REMARKS

- Filters calculated for 20% dirt.
- Max pressure is referred to the nominal air flow and the max tension/regulation.
- Hot water coil calculated for: water 40/45°C, ambient temperature 20°C and available pressure of 20 Pa.
- Sound pressure level measured at 2 m in open field (ISO 3744) with ducted air inlet and dicharge.
- The condensing / condensing+humidifier water pump is calculated for a 2 m vertical difference in height respect to the pump; total length of the discharge pipe of 5 m, internal diameter of flexible pipe of 12 mm.
- The condenser pressure drop does not include the pressostatic valve.

Technical data sheet - 2-circuits units - ED.H D version

ED.H D		332 F Kc	502 F Kc	772 F Kc	922 F Kc	1442 F Kc	1462 F Kc
Frame							
Frame		4	5	6	7	8	8
Direct expansion operation (water 30/35°C)							
Water cooled condenser - quantity	n.	2	2	2	2	1	1
Total cooling capacity (27°C - 50% R.H.)	kW	34,7	56,2	79,2	92,1	115,6	110,6
Sensible cooling capacity (27°C - 50% R.H.)	kW	30,2	53,1	68,8	81,1	102,0	100,0
SHR @ 27°C-50% U.R.	%	87	95	87	88	88	90
Nominal input power (27°C - 50% R.H.)	kW	6,8	9,9	15,1	17,1	18,2	17,6
Nominal input current (27°C - 50% R.H.)	A	12,1	20,7	31,7	32,9	38,4	32,7
Water flow rate	m^3/h	7,19	11,46	16,33	18,93	23,17	22,2
Water flow rate	l/s	2	3,18	4,54	5,26	6,44	6,17
Total cooling capacity (24°C - 50% R.H.)	kW	32,2	52,2	73,6	85,7	107,3	102,8
Sensible cooling capacity (24°C - 50% R.H.)	kW	29,2	51,3	66,7	78,6	98,7	96,9
SHR @ 24°C-50% U.R.	%	91	98	91	92	92	94
Nominal input power (24°C - 50% R.H.)	kW	6,8	9,9	14,8	16,9	18,2	17,4
Nominal input current (24°C - 50% R.H.)	A	12,3	21,1	31,4	32,6	39,1	32,4
Water flow rate	m^3/h	6,76	10,77	15,32	17,78	21,72	20,81
Water flow rate	l/s	1,88	2,99	4,26	4,94	6,03	5,78
Total cooling capacity (22°C - 50% R.H.)	kW	30,7	49,8	70,3	81,8	102,2	98,0
Sensible cooling capacity (22°C - 50% R.H.)	kW	28,6	49,2	65,4	77,0	96,5	94,7
SHR @ 22°C-50% U.R.	%	93	99	93	94	94	97
Nominal input power (22°C - 50% R.H.)	kW	6,7	9,9	14,5	16,7	18,1	17,1
Nominal input current (22°C - 50% R.H.)	A	12,3	21,2	31,1	32,3	39,4	32,2
Water flow rate	m^3/h	6,49	10,33	14,7	17,06	20,82	19,94
Water flow rate	l/s	1,8	2,87	4,08	4,74	5,78	5,54
Free cooling operation (Water IN 7°C)							
Total cooling capacity (27°C - 50% R.H.)	kW	38,9	68,4	89,1	107,0	137,2	135,4
Sensible cooling capacity (27°C - 50% R.H.)	kW	32,1	58,4	73,4	87,7	111,4	110,7
SHR @ 27°C-50% U.R.	%	82	85	82	82	81	82
Water flow rate	m^3/h	7,19	11,46	16,33	18,93	23,17	22,2
Water flow rate	l/s	2	3,18	4,54	5,26	6,44	6,17
Pressure drop (coil+evaporator+valve)	kPa	105	111	109	125	157	145
Total cooling capacity (24°C - 50% R.H.)	kW	29,7	52,2	68,0	81,7	104,8	103,4
Sensible cooling capacity (24°C - 50% R.H.)	kW	28,5	51,9	65,1	77,8	98,8	98,2
SHR @ 24°C-50% U.R.	%	96	99	96	95	94	95
Water flow rate	m^3/h	6,76	10,77	15,32	17,78	21,7	20,81
Water flow rate	l/s	1,88	2,99	4,26	4,94	6,03	5,78
Pressure drop (coil+evaporator+valve)	kPa	93	98	96	111	138	128
Total cooling capacity (22°C - 50% R.H.)	kW	26,1	47,1	59,7	71,5	91,1	90,4
Sensible cooling capacity (22°C - 50% R.H.)	kW	26,1	47,1	59,7	71,5	91,1	90,4
SHR @ 22°C-50% U.R.	%	100	100	100	100	100	100
Water flow rate	m^3/h	6,49	10,33	14,7	17,06	20,82	19,94
Water flow rate	l/s	1,8	2,87	4,08	4,74	5,78	5,54
Pressure drop (coil+evaporator+valve)	kPa	87	91	89	103	128	119
Direct expansion operation (water 40/45°C)							
Water cooled condenser - quantity	n.	2	2	2	2	2	1
Total cooling capacity (27°C - 50% R.H.)	kW	31,1	50,1	71,4	83,2	103,7	100,3
Sensible cooling capacity (27°C - 50% R.H.)	kW	28,8	49,9	65,8	77,7	97,5	96,1
SHR @ 27°C-50% U.R.	%	93	100	92	93	94	96
Nominal input power (27°C - 50% R.H.)	kW	8,6	12,1	18,5	21	22,3	21,6
Nominal input current (27°C - 50% R.H.)	A	14,4	24,7	36,4	37,5	46	37,6
Water flow rate	m^3/h	6,89	10,8	15,62	18,1	21,9	21,19
Water flow rate	l/s	1,91	3	4,34	5,03	6,08	5,89
Total cooling capacity (24°C - 50% R.H.)	kW	29,2	47,5	67,1	78,3	97,6	94,4
Sensible cooling capacity (24°C - 50% R.H.)	kW	28,0	47,5	64,0	75,5	94,7	93,4
SHR @ 24°C-50% U.R.	%	96	100	95	96	97	99
Nominal input power (24°C - 50% R.H.)	kW	8,3	11,8	17,7	20,3	21,8	20,8
Nominal input current (24°C - 50% R.H.)	A	14,3	24,6	35,3	36,6	45,9	36,7
Water flow rate	m^3/h	6,53	10,31	14,75	17,13	20,74	20,02
Water flow rate	l/s	1,82	2,86	4,1	4,76	5,76	5,56
Total cooling capacity (22°C - 50% R.H.)	kW	27,4	44,9	62,9	73,4	91,6	88,7
Sensible cooling capacity (22°C - 50% R.H.)	kW	27,1	44,9	62,0	73,4	90,1	88,7
SHR @ 22°C-50% U.R.	%	99	100	99	100	98	100
Nominal input power (22°C - 50% R.H.)	kW	8,6	12,1	17,9	20,7	22,3	21,2
Nominal input current (22°C - 50% R.H.)	A	14,6	25,3	35,7	37,1	47,2	37,2
Water flow rate	m^3/h	6,25	9,89	14,05	16,35	19,79	19,1
Water flow rate	l/s	1,74	2,75	3,9	4,54	5,5	5,31
Free cooling operation (Water IN 7°C) (part 1)							
Total cooling capacity (27°C - 50% R.H.)	kW	38,4	66,9	87,8	105,4	134,7	133,2
Sensible cooling capacity (27°C - 50% R.H.)	kW	31,9	57,8	72,9	87,1	110,4	109,8
SHR @ 27°C-50% U.R.	%	83	86	83	83	82	82
Water flow rate	m^3/h	6,89	10,8	15,62	18,1	21,9	21,19
Water flow rate	l/s	1,91	3	4,34	5,03	6,08	5,89
Pressure drop (coil+evaporator+valve)	kPa	97	99	100	115	141	132
Total cooling capacity (24°C - 50% R.H.)	kW	29,4	51,3	67,1	71,6	103,2	102,0
Sensible cooling capacity (24°C - 50% R.H.)	kW	28,4	51,1	64,8	71,6	98,1	97,5
SHR @ 24°C-50% U.R.	%	97	100	97	100	95	96
Water flow rate	m^3/h	6,53	10,31	14,75	17,13	20,74	20,02

Technical data sheet - 2-circuits units - ED.H D version

ED.H D		332 F Kc	502 F Kc	772 F Kc	922 F Kc	1442 F Kc	1462 F Kc
Frame							
Frame		4	5	6	7	8	8
Free cooling operation (Water IN 7°C) (part 2)							
Water flow rate	l/s	1,82	2,86	4,1	4,76	5,76	5,56
Pressure drop (coil+evaporator+valve)	kPa	87	90	89	103	97	119
Total cooling capacity (22°C - 50% R.H.)	kW	25,9	46,6	62,9	70,9	90,3	89,7
Sensible cooling capacity (22°C - 50% R.H.)	kW	25,9	46,6	62,0	70,9	90,3	89,7
SHR @ 22°C-50% U.R.	%	100	100	99	100	100	100
Water flow rate	m^3/h	6,25	9,89	14,05	16,35	19,79	19,1
Water flow rate	l/s	1,74	2,75	3,9	4,54	5,5	5,31
Pressure drop (coil+evaporator+valve)	kPa	80	83	55	95	116	109
Scroll compressors							
Quantity	n.	2	2	2	2	4	2
Circuits	n.	2	2	2	2	2	2
Capacity steps	%	0 / 50 / 100					
Max input current	A	30	38	54	66	108	102
Inrush current	A	85	119	167	191	221	266
AC fans with autotransformer							
Quantity	n.	1	2	2	3	4	4
Fan(s) supply voltage	V	290	290	360	290	280	280
Air flow	m^3/h	7.100	13.300	16.200	19.300	24.300	24.300
Available pressure	Pa	20	20	20	20	20	20
Rotation speed	rpm	1.218	1.217	1.299	1.215	1.205	1.205
Input power	kW	1,77	3,54	3,97	5,29	6,94	6,94
Input current	A	3,08	6,13	7,41	9,15	11,92	11,92
Max available pressure (max ESP)	Pa	169	168	58	169	178	178
Sound pressure level @ 2 m - D Version	dB(A)	56	60	63	61	62	62
Sound pressure level @ 2 m - D Version (max ESP)	dB(A)	59	62	63	64	65	65
EC Fans - HP (High pressure)							
Quantity	n.	1	2	2	3	4	4
Fan(s) supply voltage	V	400	400	400	400	400	400
Air flow	m^3/h	7.100	13.300	16.200	19.300	24.300	24.300
Max available pressure (max ESP)	Pa	517	409	409	515	523	523
Rotation speed	rpm	1.168	1.254	1.254	1.164	1.154	1.154
Input power	kW	1,31	3,18	3,18	3,96	5,15	5,15
Input current	A	2,11	5,11	5,11	6,34	8,26	8,26
Sound pressure level @ 2 m - D Version	dB(A)	55	58	61	60	61	61
Sound pressure level @ 2 m - D Version (max ESP)	dB(A)	60	63	64	65	67	67
Humidifier							
Steam production (nominal)	kg/h	8	8	8	8	8	8
Steam production (max)	kg/h	8	8	8	8	8	8
Maximum input power	kW	6	6	6	6	6	6
Maximum input current	A	8,7	8,7	8,7	8,7	8,7	8,7
Specific conductivity at 20°C (min/max)	µS/cm	300 / 1250					
Total hardness (min/max)	mg/l CaCo3	100 / 400					
Electrical heaters							
Steps	n.	3	3	3	3	3	3
Power	kW	9	15	18	24	27	27
Input current	A	13	21,7	26	34,6	39	39
Oversized electrical heaters							
Steps	n.	3	3	3	3	3	3
Power	kW	12	18	24	27	36	36
Input current	A	17,3	26	34,6	39	52	52
Hot water coil							
Heating capacity	kW	19,7	35,5	43,6	54,1	73,2	73,2
Water flow rate	m^3/h	3,4	6,1	7,5	9,4	12,8	12,8
Pressure drop (coil+3-way valve)	kPa	76	79	70	78	81	81
Internal volume of the coil	dm^3	3,8	6,4	7,7	8,7	15,3	15,3
Hot gas coil							
Heating capacity	kW	18	32	39	49	60	60
Condensing water pump							
Nominal water flow	l/h	390	390	390	390	390	390
Max water flow (pressure = 0 m)	l/h	500	500	500	500	500	500
Max height (water flow = 0 m^3/h)	m	5,4	5,4	5,4	5,4	5,4	5,4
Dimensions							
Length	mm	1.160	1.860	2.210	2.565	3.100	3.100
Width	mm	850	850	850	850	850	850
Height	mm	1.980	1.980	1.980	1.980	1.980	1.980
Weight - D Version	kg	457	635	747	897	1.124	1.113
Power supply							
Power supply	V / ph / Hz	400 / 3 / 50 + T + N					

REMARKS
- Filters calculated for 20% dirt.
- Max pressure is referred to the nominal air flow and the max tension/regulation.
- Hot water coil calculated for: water 40/45°C, ambient temperature 20°C and available pressure of 20 Pa.
- Sound pressure level measured at 2 m in open field (ISO 3744) with ducted air inlet and dicharge.
- The condensing / condensing+humidifier water pump is calculated for a 2 m vertical difference in height respect to the pump; total length of the discharge pipe of 5 m, internal diameter of flexible pipe of 12 mm.
- The condenser pressure drop does not include the pressostatic valve.